The International Journal Of Engineering And Science (IJES)
|| Volume || 3 || Issue || 11 || Pages || PP -10-17 || 2014 ||
ISSN (e): 2319 – 1813 ISSN (p): 2319 – 1805

Effects of Various Material Infiltrants in Sls Process

J.Saiganesh [1] ,J.D.Andrew Pon Abraham [2]
[1,2]*Assistant Professor ,Department of Automobile engineering Kumaraguru College of Technology Coimbatore, India*

---------- ABSTRACT ----------
This paper presents the infiltration effect of various materials produced by selective laser sintered stainless steel green parts. Quality of the rapid prototyping products are decided by the various factors such as process type, type of infiltration, layer thickness, orientation, laser speed etc.,. The infiltration effect of Bell Metal, Brass, and Bronze on stainless steel green part was determined. Hardness, dimensional study bending strength and surface roughness are determined.

Keywords: *Infiltration, layer thickness, orientation, laser speed*

Date of Submission: 05 November 2014 Date of Accepted: 15 November 2014

I. INTRODUCTION

Freeform fabrication of metallic parts poses unique challenges. Because metals have high melting point, are classically brittle and are resistant to powder sintering, the processes for their manufacture are limited in general. Posing additional manufacturing constraints associated with freeform fabrication exacerbate the problem of part creation. Therefore, direct free forming has not been feasible. However, an indirect freeform fabrication approach has proven viable, involving free forming a green part with the assistance of a binder followed by post-processing to produce a final part. One potential post-processing approach involves infiltration of a free formed metallic green part with a lower melting point phase such as an epoxy or metal. Infiltration offers several manufacturing advantages for free formed metallic parts. Infiltration is applicable for parts with open or continuous porosity which serves as a pathway for the infiltrant into the part. This allows relatively rapid full density processing. Dimensional changes, the primary subject of this paper, are minimal as the rigid part framework does not change shape significantly during infiltration. Commercially available freeform machines used for green part creation do not require prior modification since the binder is a low-melting-point, fusible material.

II. RAPID PROTOTYPING

RP is a generic term for a number of technologies that enable components to be made without the need for conventional tooling in the first instance or indeed without the need to engage the services of skilled model-makers. Many manufacturing processes are subtractive, in that they modify the geometry of a mass of material by removing parts of the material until the final shape is achieved. Conventional milling and turning are good examples of subtractive processes. By contrast, RP techniques are additive processes. RP components are built-up gradually in layers until the final geometry is obtained. The way in which the layers are produced, however, and the materials in which parts can be built vary significantly between the different RP processes.

The starting point for the RP process is typically a 3D CAD model prepared and exported to meet the requirements of a given technology. Various other “inputs”, in addition to CAD, can be used to create RP components; these include medical applications such as MRI and CAT scanning as well as point cloud data generated by engineering scanning or digitising systems. Whatever be the source of the original data it is reformatted into a stl file and sliced horizontally, each individual slice is subsequently presented to the selected RP manufacturing process. The RP system will subsequently reproduce the sliced data thereby creating a physical example of the original “CAD” data.

III. THREE STAGES OF RP SYSTEM

Although there are several RP technologies with different working principles, they all produce parts using similar steps:

- A three-dimensional CAD file is "sliced" into two-dimensional contours, representing cross-sectional layers of the object
- This information is sent to a RP machine, where the build plan is generated
- Starting with the bottom layer, a cross-section of the part is deposited (usually via the rastering of the 2D contour with several line deposits)
- The part is lowered one layer thickness (typically via a build elevator), and the next layer is deposited; this process repeats until the entire part is deposited.

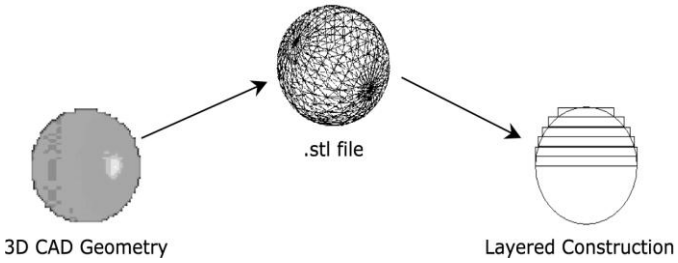

Three Stages of RP System

IV. SELECTIVE LASER SINTERING

Selective Laser Sintering (SLS) is well-known technique for rapid proto-typing, rapid manufacturing and rapid tooling and is fast gaining acceptance in various areas of applications such as aerospace, moulding and biomedical. SLS has gone through vast changes since its introduction more than two decades back. The process has become a leading technique for rapid manufacturing and rapid tooling and can process more types of materials than any other rapid prototyping/manufacturing techniques. With the selective laser sintering (SLS) method a thin layer of finely ground Nylon and Metallic powder is spread onto a working platform. The laser energy is directed onto the powder via a scanning system where it causes the powder to sinter to become a solid. Then the working platform is lowered, a new covering of powder layer is spread and the scanning is repeated.

V. SELECTION OF MATERIALS

At present, the parts produced using Selective Laser Sintering (SLS) method and infiltration process is mainly focused on the production of the parts with high accuracy and definition, very little effort has been devoted on the micro structural development and mechanical properties of the part and material. The choice of infiltrant plays a vital role on micro structure and mechanical properties of the part. Materials used for infiltration process are selected based on their properties. Thermal, mechanical, chemical composition and physical properties of various materials used for SLS are studied. Materials selected for this dimensional stability study are as follows:
Base materials for green part: Steel powder
Binder for metallic powder: Nylon powder
Infiltrant for post processing: Bronze, Brass and Bell Metal.

Bronze

Melting Point	**880 - 1000ºC**
Yield Stress	**82 - 690MPa**
Ultimate Stress	**200 - 830MPa**
Elongation	**5 - 60%**
Elastic Modulus	**96 - 120GPa**
Shear Modulus	**36 - 44GPa**
Poisson's Ratio	**0.34**

Brass

Melting Point	**900 - 940ºC**
Elastic Modulus	**96 - 110GPa**
Shear Modulus	**36 - 41GPa**
Poisson's Ratio	**0.34**
Yield Stress	**70 - 550 MPa**
Ultimate Stress	**70 - 550 MPa**
Elongation	**4 - 60%**

Bell Metal

Melting point	**870°C**
Specific Gravity	**8.7**

DIMENSIONAL STUDY

The green part obtained consists of network of open pores hence it is fragile in nature, so the dimensions are measured using optical profile projector at a magnification of 20x.

VI.OPTICAL PROFILE PROJECTOR

An optical profile projector is an optical instrument that can be used for measuring. It is a useful item in a small parts machine shop or production line for the quality control inspection team. The projector magnifies the profile of the specimen, and displays this on the built-in projection screen. On this screen there is typically a grid that can be rotated 360 degrees so the X-Y axis of the screen can be aligned with a straight edge of the machined part to examine or measure. This projection screen displays the profile of the specimen and is magnified for better ease of calculating linear measurements. An edge of the specimen to examine may be lined up with the grid on the screen. From there, simple measurements may be taken for distances to other points. This is being done on a magnified profile of the specimen. It can be simpler as well as reduce errors by measuring on the magnified projection screen of a profile projector.

Optical Profile Projector

The typical method for lighting is by diascopic illumination, which is lighting from behind. This type of lighting is also called transmitted illumination when the specimen is translucent and light can pass through it. If the specimen is opaque, then the light will not go through it, but will form a profile of the specimen. Measuring of the sample can be done on the projection screen. A profile projector may also have episcopic illumination which is light shining from above. This helps in displaying bores or internal areas that is to be measured

GREEN PART FABRICATION

Stainless steel powder is used as the raw material for manufacturing the green part in SLS machine, whose properties are given in the table,

Physical properties	Testing temperature	SI Units	Testing method	Value
density	**23^0C**	**g/cm^3**	**ASTM D792**	**7.7**

Thermal Properties of Stainless Steel Powder (ST 100)

Thermal properties	Testing temperature	SI Units	Testing method	value
Thermal conductivity	**100^0C**	**W/mK**	**ASTM E457**	**49**
Thermal conductivity	**200^0C**	**W/mK**	**ASTM E457**	**56**
Coefficient of thermal expansion × 10^6	**51 – 150^0C**	**m/m/^{0}C**	**ASTM E831**	**12.4**

Physical Properties of Stainless Steel Powder (ST 100)

Mechanical properties	SI Units	Testing method	value
Tensile yield strength	MPa	ASTM E8	305
Tensile strength	MPa	ASTM E8	510
Elongation	%	ASTM E8	10
Young modulus	GPa	ASTM E8	137
compression yield strength	GPa	ASTM E9	317
Hardness-Rockwell "B" as infiltrated		ASTM E18	87
Hardness-Rockwell "B" as machined		ASTM E18	79

SPECIFICATION OF THE SLS MACHINE

Model: Sinter station 2500^{plus}
Build volume: 13" x 11" x 16.5"
Materials: duro form FA, duro form GF
Build step size: 0.004" Module: Hi-Q Thermal control module
Scan speed: 5m/s

STEPS INVOLVED IN MANUFACTURING OF GREEN PART

CAD Model Created using Solid Edge V19 Software

The CAD model required for green part fabrication is created using Solid Edge V19 software. The CAD model is created as per the required dimension.

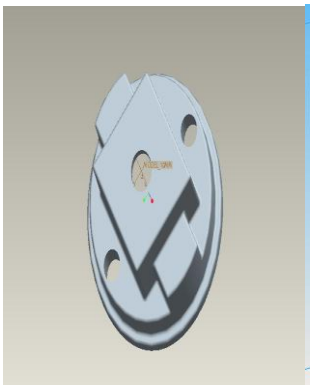

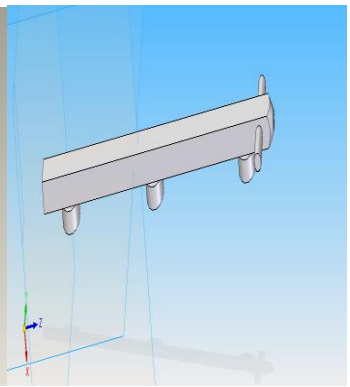

CAD Model of Circular Component **CAD Model of Bar**

Saving the CAD Model

The CAD model is saved in .stl (Standard Template Language) format which is the standard format used in Selective Laser sintering machine. In a .stl file, a CAD model will be tessellated into a triangular mesh and the three vertexes and normal to plane of triangle will be stored in it. The advantage of the STL format is that most CAD systems support it, and it simplifies the part geometry by reducing it to its most basic components.

Start Build Set Up

BUILD SET UP is the program we use to process an STL file and send it to the SLS machine. It is only available on the computer next to the SLS machines. Click the "BUILD SET UP" link on the computer's desktop, or click "Start", "Programs", "BUILD SET UPV21" and "BUILD SET UP" to start the program. When BUILD SET UP appears, it will look like the image below (Fig 3.1). Check out the current "Modeller Setup" at the right of the screen. Verify that the program is configured correctly (machine, material, etc.) but do not alter any of the settings.

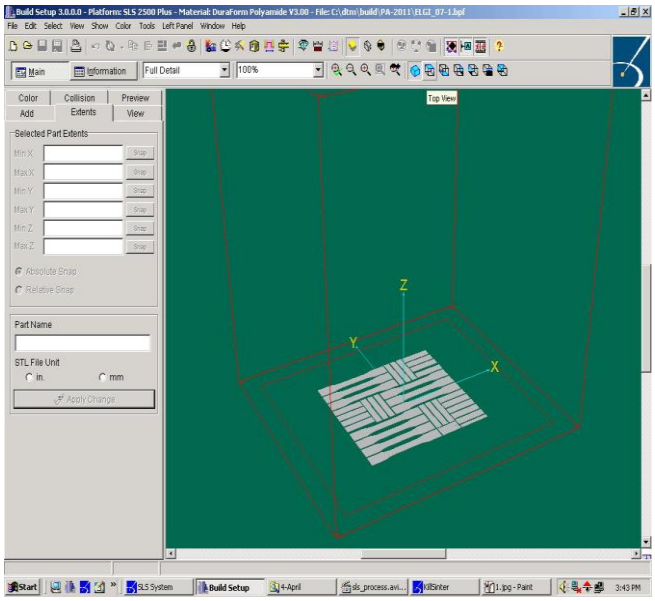

Build Setup View

Slicing

It is the process of converting a 3D model into layers. It is a process of intersecting the STL file with a set of horizontal planes by the same layer thickness. Each horizontal plane yields a plane of contour which is piecewise linear. The advantage of slicing a STL file is that the problem is reduced to finding plane-triangle intersections. The CAD model is sliced into thin layers of 0.254mm. Slicing will be done by build set up. The output of the build setup file is saved in .bpf (build packet file) format and then it is imported to the sinter software in the SLS machine.

Green Part of Circular Component

Green Part of Bar

Tab

Stainless steel tabs acts as the gate way for the infiltration of metals or alloys into the stainless steel component. The components and the metals are placed on the tab through which the infiltration process takes place. Thus the tabs must be of the required dimension to accommodate the parts for infiltration. The manufactured tabs are shown n the fig

Green Part of Tab

INFILTRATION

The functional parts or prototypes produced by Selective Laser Sintering are not full dense parts. They are weak and unable to withstand the mechanical loads. So metallic parts produced in SLS require post processing to densify and strengthen the parts. Infiltration is one of the post processing methods to densify the parts. Selection of infiltrant material will influence the mechanical properties of the part. High density, porous free parts can be fabricated using infiltration technique. In order to find out the effect of infiltration on the sintered samples, they were infiltrated with bronze, aluminium and magnalium using a 25 h furnace treatment in a LASER FORM oven (DTM Corporation)

SPECIFICATION OF THE OVEN

Power	: 240V AC
	: 3 phase, 50/60Hz
	: 25kVA
Model	: Laser Form Oven

Laser Form Oven

TEMPERATURE DISTRIBUTION OF THE OVEN

The cycle was programmed to maintain a temperature of 1050 ^{0}C for 5 h allowing the materials to melt and infiltrate the part. The oven then cools down to a temperature below 200^{0}C and the flow of nitrogen and hydrogen is continued for maintaining a non-oxidative environment. The oven cycle for infiltration has been given in fig. The materials were kept in contact with the porous green part to guarantee infiltration through capillary action.

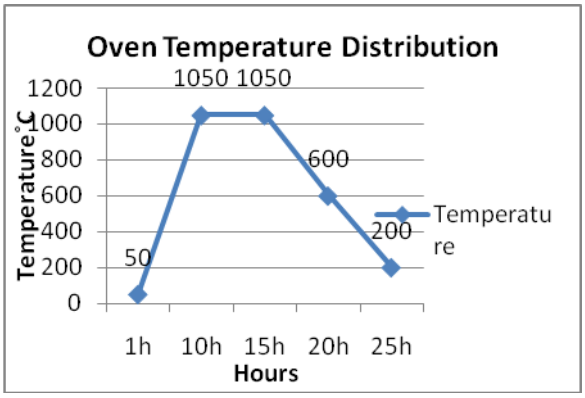

Oven Temperature Distribution

HARDNESS TEST

BRINELL HARDNESS TESTING MACHINE

In Brinell hardness testing machine the load is applied by means of a single lever which is hydraulically operated. The main lever can be raised or lowered by operating a lever. The oil necessary for the hydraulic power is obtained from a pump driven by a fractional HP motor. An indicator in front shows the positions of the loading lever and its movement, indicating the rate of applications of the load which can be altered by adjusting a knob. A circular table mounted on a robust steel screw serves as a stage for the specimen during the test. The table can be raised by rotating a handle wheel. The machine is supplied with two steel balls 5mm and 10mm in diameter. A star handle enables to bring the ball in contact with the surface of the specimen.
A steel ball of certain diameter is forced by a load into the specimen and the diameter if the indentation is measured. Comparison of surface areas of indentation gives the measure of hardness.
Brinell hardness 'HB' = load in kg / curved surface area of indentation in sq.mmQ

BIS SPECIFICATION FOR THE TEST

1. Thickness of the test specimen shall not be less than 8 times the depth of the indentation 'h'
   Depth of indentation 'h' = load in kg / (π × diameter × Brinell hardness)
2. The distance of the centre of indentation from the edge of test specimen shall be atleast 2 times the diameter of the indentation in the case of steel (3 times the diameter of indentation in the case of light metals like aluminium, magnesium and their alloys) and the distance between the centres of two adjacent indentations shall be atleast 4 times the diameter of indentation in the case of steel (6 times the diameter of indentation in the case of light metals and their alloys)
3. The applied load (kgs) shall be as follows
   Material : load (kg)
   Steel : $30D^2$
   HB between 55 and 80 : $5D^2$ or $10D^2$ or $15D^2$
   HB less than : 55
4. The test load shall be maintained for 10-15 seconds in the case of steel, 30±2 seconds in the case of light metals and their alloys and 120±5 seconds in the case of magnesium and their alloys.
5. The Brinell Hardness number is calculated using the formula
   Brinell hardness = $2P/ (\pi D (D-\sqrt{(D^2-d^2)})$
   P = Load (in kg)
   D = Diameter of Indenter (mm)
   d = Diameter of Indentation (mm)

S.No	Material	Diameter of the indenter 'D' (mm)	Load 'P' (kg)	Diameter of indentation 'd'(mm)	BHN
1	Brass	5	3000	4.81	74.95
2	Bell Metal	5	3000	4.75	76.65
3	Bronze	5	3000	4.71	85.2

SURFACE ROUGHNESS TEST

A profilometer SURFCORDER SE1200, Kosaka Lab Ltd., was used to measure the surface roughness. Average surface roughness values (Ra) were determined for each infiltrated components. Average surface roughness values (Ra) in microns are measured. Measurement were made on infiltrated components of different infiltrants like aluminium, bronze and magnalium and tabulated in table 6.1 One face of the components were machined using surface grinder and the surface roughness values were noted and tabulated.

MEASURING CONDITION

Mode : ASME 95
Measuring values : Ra, Ry and Rz
Measuring speed : 0.5mm/s
Cut-off value : 0.8mm
Vertical magnification : auto
Return speed : 1.0mm/s

Cut- off value is the distance the stylus moves on surface. The maximum evaluation length for each cut- off value is listed in table

Cut-off value (mm)	Maximum evaluation length (mm)
0.08	0.72
0.25	2.25
0.80	7.20
2.5	22.50

Cut-off Value and Maximum Evaluation Length

REFERENCES

[1]. Sparrow, E. M., Baliga, B. R., Patankar, S.V., ”Forced Convection Heat Transfer from a Shrouded Fin Array with and without Tip Clearance”, ASME J. Heat Transfer, Vol. 100, Nov. 1978, pp. 572-579.

[2]. Sparrow, E. M., Beckey, T. J., ”Pressure Drop Characteristics for a Shrouded Longitudinal-Fin Array with Tip Clearance”, ASME J. Heat Transfer, Vol. 103, May 1981, pp. 393-395.

[3] F.P. Incropera, Convection heat transfer in electronic equipment cooling, J. Heat Transfer 110 (1988) 1097–1111.

[4] W. Nakayama, Thermal management of electronic equipment: a review of technology and research topics, Appl. Mech. Rev. 39 (12) (1986) 1847–1868.

[5] C.R. Biber, Pressure drop and heat transfer in an isothermal channel with impinging flow, IEEE Trans. Components Pack. Manuf. Technol. A 20 (1997)458–462.

[6] Y. Kondo, M. Behnia, W. Nakayama, H. Matsushima, Optimization of finned heat sinks for impingement cooling of electronic packages, J. Electronic Pack. (1998) 259–266.

[7] Z. Duan, Y.S. Muzychka, Experimental investigation of heat transfer in impingement air cooled plate fin heat sinks, J. Electronic Pack. 128 (2006) 412–418.

[8] S. Sathe, K.M. Kelkar, K.C. Karki, C. Tai, C. Lamb, S.V. Patankar, Numerical prediction of flow and heat transfer in an impingement heat sink, J. Electronic Pack. 119 (1997) 58–63.

[9] G. Ledezma, A.M. Morega, A. Bejan, Optimal spacing between pin fins with impinging flow, J. Heat Transfer 118 (1996) 570–577.

[10] Y. Kondo, H. Matsushima, T. Komatsu, Optimization of pin fin heat sinks for impingement cooling of electronic packages, J. Electronic Pack. 122 (2000) 240–246.